Broadley-James ® Corporation
19 Thomas • Irvine, CA 92618
Tel: (949) 829-5555 • Fax: (949) 829-5560

Title:

Model D215-B070-PT-D9
1 1/2" Sanitary Flange OxyProbe®
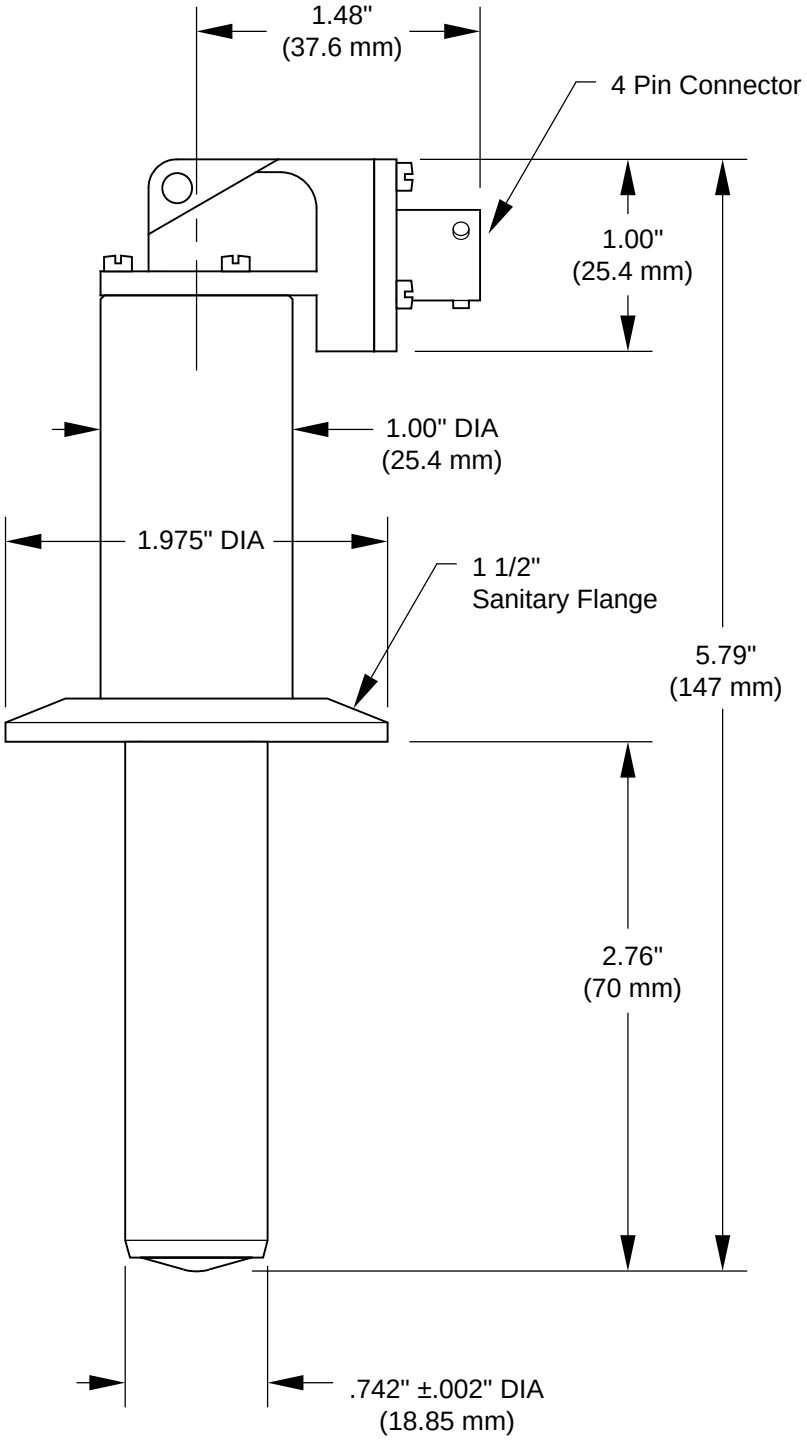
Doc No:	Rev:
P3006	--
Pg: 1 / 1	Date: 18-Oct-02