Broadley-James ® Corporation
19 Thomas • Irvine, CA 92618
Tel: (949) 829-5555 • Fax: (949) 829-5560

Title:

Model 335-61-H150 FermProbe® Sensor Housing
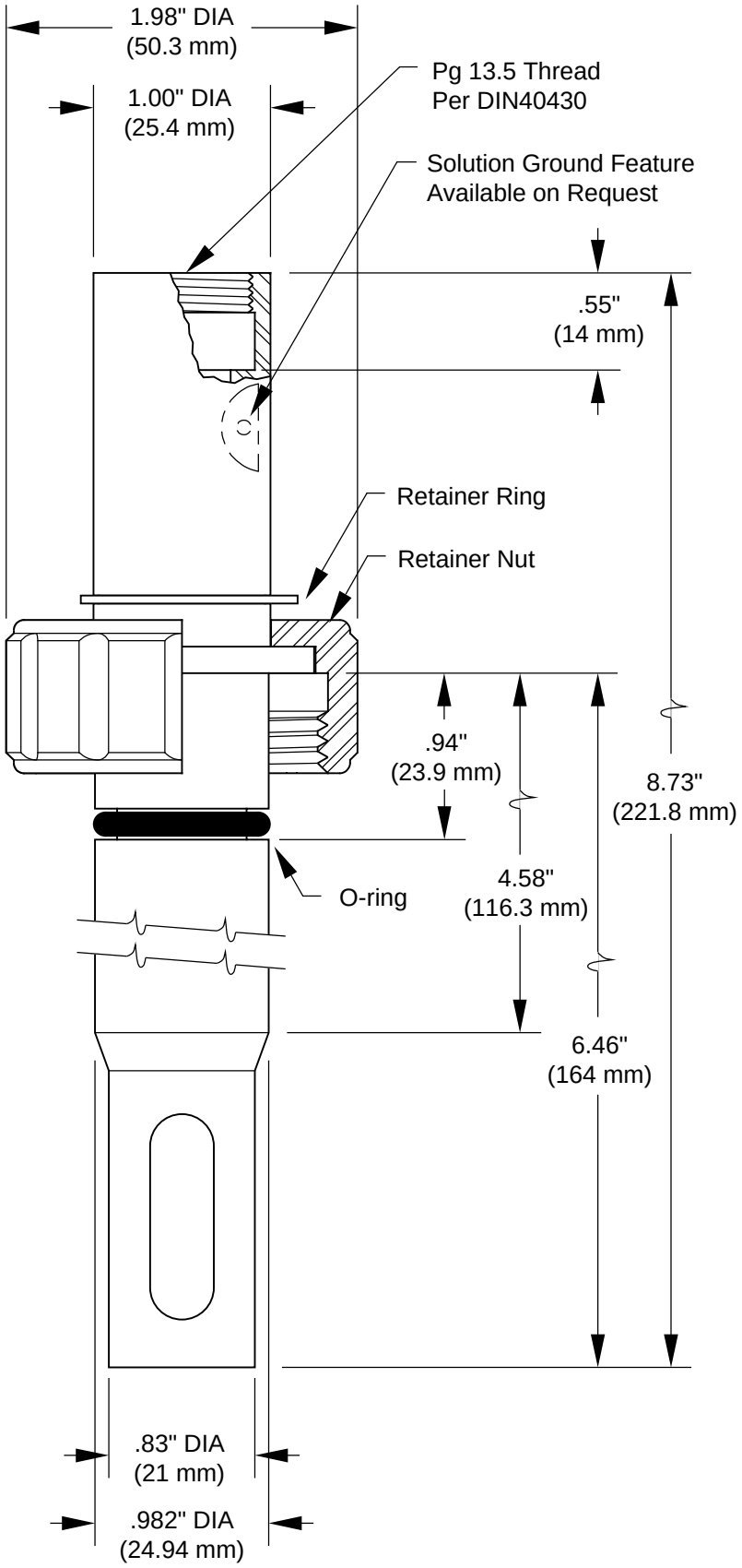
Doc No:	Rev:
P2796	--
Pg: 1 / 1	Date: 16-Nov-01