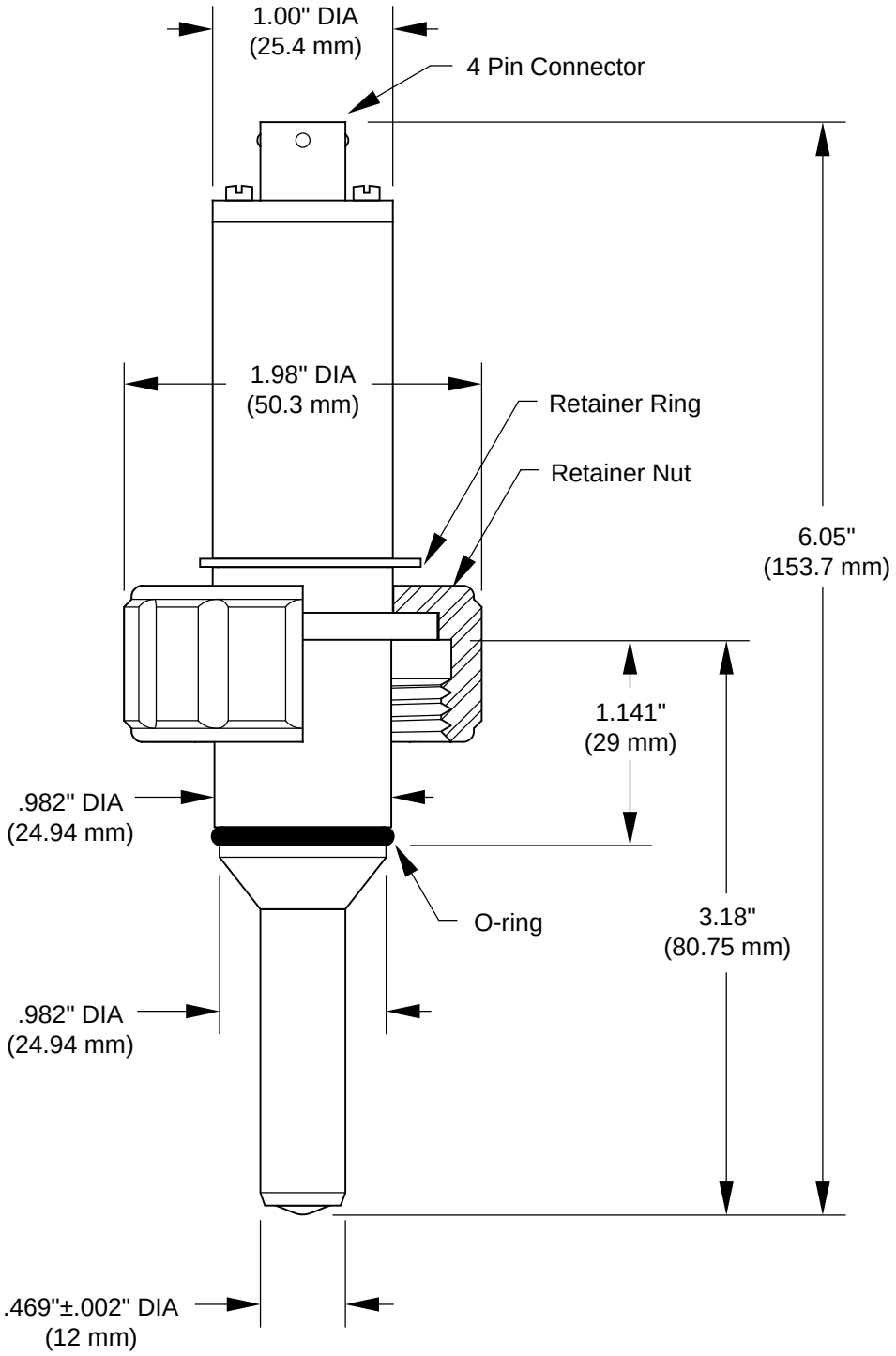Broadley-James ® Corporation 19 Thomas • Irvine, CA 92618 Tel: (949) 829-5555 • Fax: (949) 829-5560	Title: **Model D600-B080-PT-D9 25 mm OxyProbe® II**	Doc No: **P4644**	Rev: **--**
		Pg: 1 / 1	Date: 11-Oct-11