Broadley-James ® Corporation
19 Thomas • Irvine, CA 92618
Tel: (949) 829-5555 • Fax: (949) 829-5560

Title:

Model D430-B095-PT-D9
25 mm OxyProbe®
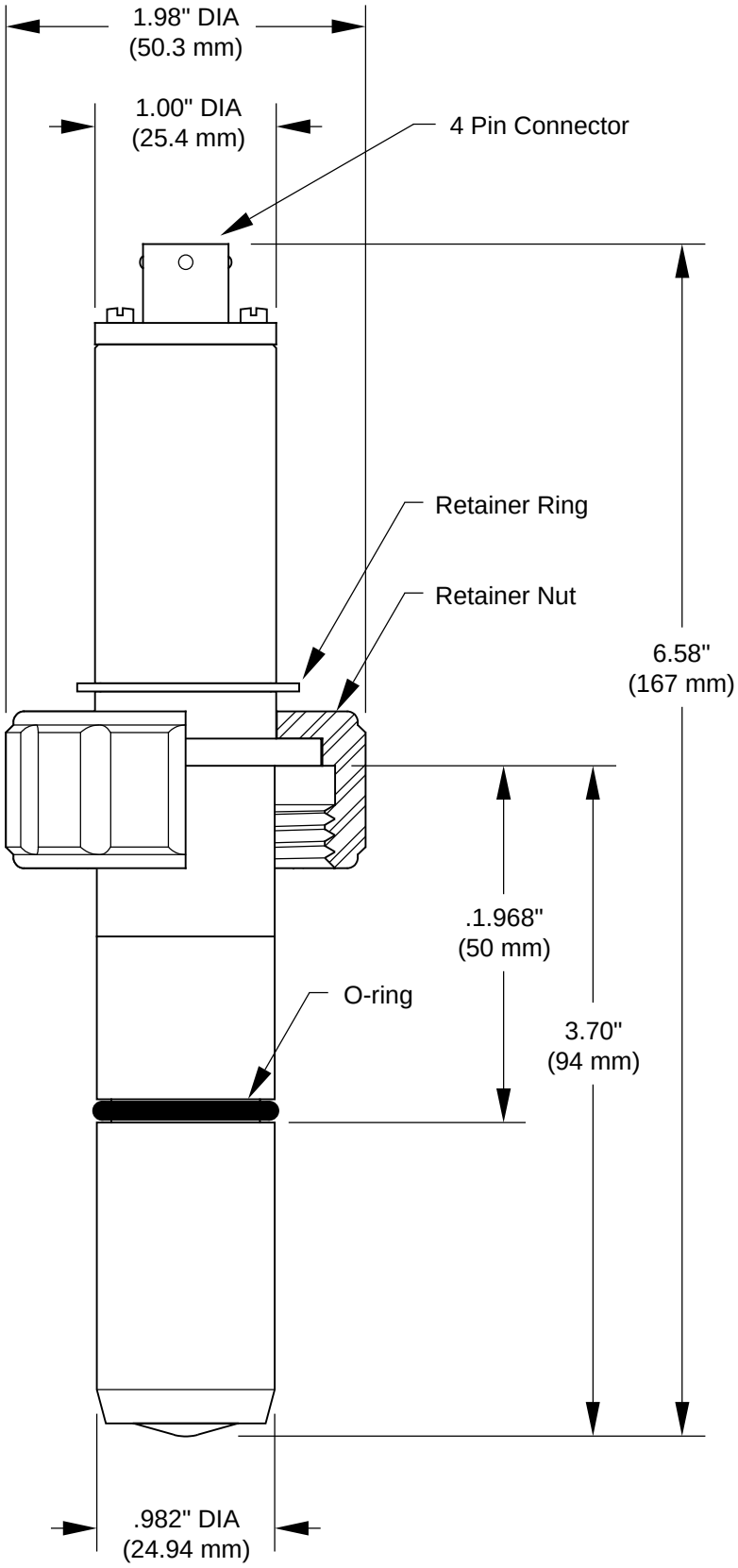
Doc No:	Rev:
P2804	**--**
Pg: 1 / 1	Date: 13-Oct-09